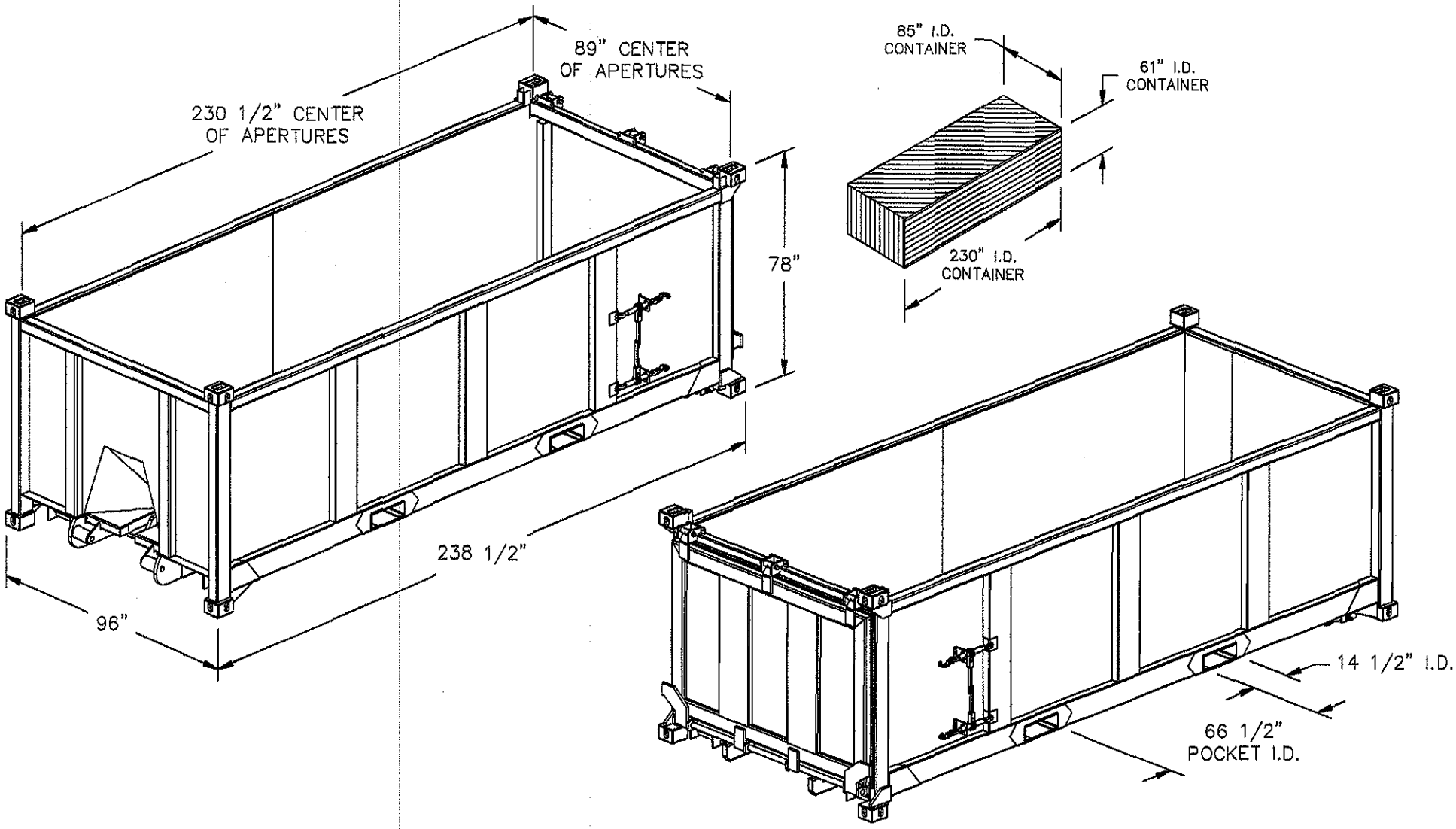

REV	ECN #	DATE	DESCRIPTION	INT.
-	-	-	-	-
-	-	-	-	-
-	-	-	-	-
-	-	-	-	-
-	-	-	-	-
-	-	-	-	-
-	-	-	-	-
-	-	-	-	-
-	-	-	-	-

WASTEQUIP
ACCURATE

THIS DRAWING AND ALL THE INFORMATION CONTAINED HERIN IS THE EXCLUSIVE PROPERTY OF ACCURATE INDUSTRIES. THIS DRAWING CANNOT BE LOANED, COPIED OR ANY INFORMATION DISSEMINATED IN ANY FASHION WITHOUT THE EXPRESS WRITTEN PERMISSION OF ACCURATE INDUSTRIES.

25.4 CU. YD. INTERMODAL
CONTAINER WITH TOP HINGE DOOR

DRAWN TAF	SCALE N.T.S.	JOB/ORDER #	SHEET# 0133
CHK'D			
APP'D	DATE 4/28/99	FILE# 5SA0133	DWG. FMT. R14